NOTE:
1. SEE PLAN FOR LOCATIONS.
2. DESIGN SHEAR CONNECTION FOR SCHEDULED BEAM REACTIONS DETAIL 6/S4.6
3. MOMENT CONNECTION TO DEVELOP THE FULL CAPACITY OF THE BEAM.

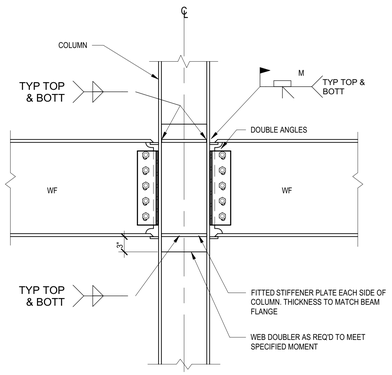

BEAM TO COLUMN FLANGE

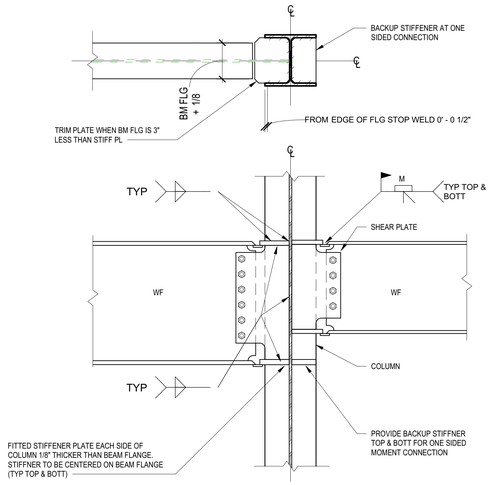

BEAM TO COLUMN WEB

C1 TYPICAL WF TO BEAM MOMENT CONNECTION

S6-1-02 SCALE:NOT TO SCALE

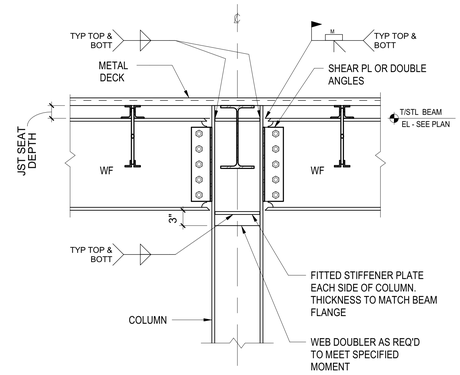

NOTE:
1. SEE PLAN FOR LOCATIONS.
2. DESIGN SHEAR AND MOMENT CONNECTION FOR SCHEDULED BEAM REACTIONS.

C2 TYP MOMENT CONNECTION @ ROOF DETAIL

S6-1-02 SCALE:NOT TO SCALE

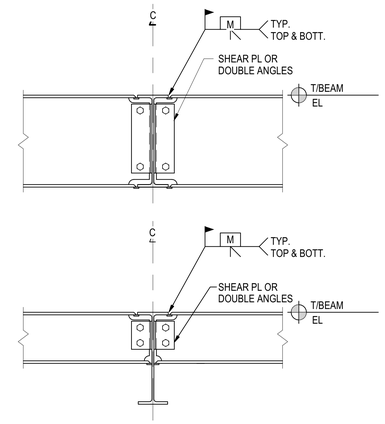

NOTE:
1. SEE PLAN FOR LOCATIONS.

C3 TYP BEAM-BEAM MOMENT CONNECTION

S6-1-02 SCALE:NOT TO SCALE

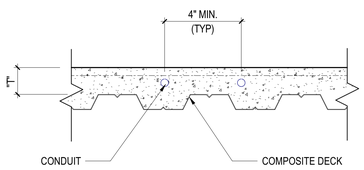

NOTES:
1. OUTSIDE DIAMETER OF CONDUIT SHALL NOT EXCEED 1" NOR 1/3 "T".
2. CROSSOVERS OF CONDUITS ARE PERMITTED AS LONG AS THE COMBINED THICKNESS OF THE CONDUITS DOES NOT EXCEED 1/3 "T".
3. MAINTAIN 3/4" MINIMUM CLEAR COVER
4. CONDUITS GROUPED TOGETHER NEAR JUNCTION BOXES SHALL BE REINFORCED AS SLAB OPENINGS, SEE DETAIL A1 ON THIS SHEET.

B1 CONDUIT IN COMPOSITE SLAB DETAIL

S6-1-02 SCALE:NOT TO SCALE

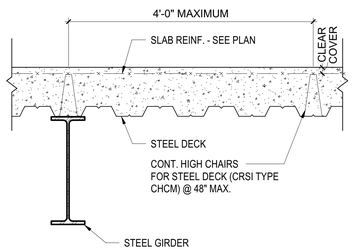

TYPICAL REINFORCEMENT PLACEMENT IN COMPOSITE SLABS

B2 DETAIL

S6-1-02 SCALE:NOT TO SCALE

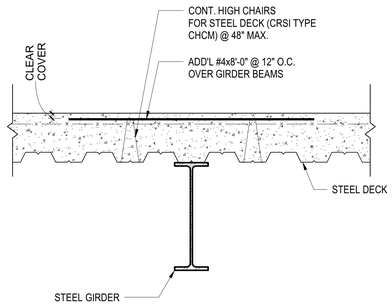

NOTES:
1. REINFORCEMENT SHOWN OVER GIRDERS IS IN ADDITION TO THE TYPICAL SLAB REINFORCEMENT SPECIFIED ON THE DRAWINGS.

TYPICAL ADDITIONAL REINFORCEMENT IN COMPOSITE SLABS AT INTERIOR GIRDERS

B3 DETAIL

S6-1-02 SCALE:NOT TO SCALE

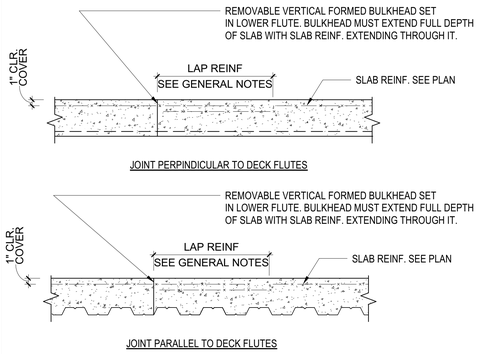

NOTES:
1. CONSTRUCTION JOINTS PARALLEL TO DECK FLUTES SHALL BE LOCATED NO CLOSER THAN 5'-0" FROM THE CENTERLINE OF THE NEAREST GIRDER.
2. CONSTRUCTION JOINTS PERPINDICULAR TO THE DECK FLUTES SHALL BE LOCATED AT THE CENTER OF THE DECK METAL SPAN.
3. AT THE CONTRACTORS OPTION, PREFORMED PERMANENT METAL SHEAR KEY FOLLOWING CONTOUR OF METAL DECK FLUTES MAY BE USED WITH SLAB REINF. STOPPING EACH SIDE AND #3 DOWELS x 2'-0" CENTERED @ 18'-0" O.C.

B4 COMPOSITE SLAB CONSTRUCTION JOINT DETAIL

S6-1-02 SCALE:NOT TO SCALE

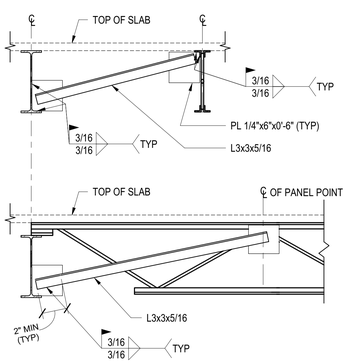

NOTES:
1. ANGLE BRACES SHALL BE AT MAXIMUM 5 FT O.C.
2. FIELD WELDING OF 1/4" CONNECTION PLATES SHALL BE AT FABRICATORS OPTION.
3. ALL BRACING SHALL BE IN PLACE AND WELDED BEFORE DECK INSTALLATION.
4. BRACE SIZES SHOWN ARE TYPICAL UNLESS OTHERWISE NOTED ON PLAN.
5. REFER TO PLAN NOTES FOR DECK CONSTRUCTION.

A1 TYP BOTTOM FLANGE BRACE (AT STEEL JOIST)

S6-1-02 SCALE:NOT TO SCALE

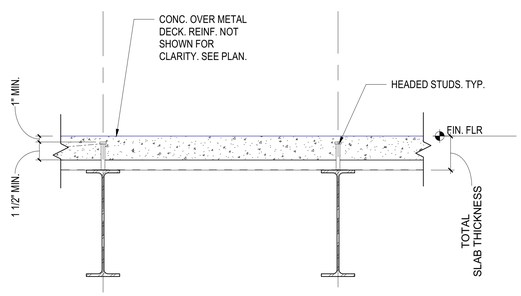

NOTES:
1. FOR METAL DECK, SLAB THICKNESS AND REINF. SEE PLANS.
2. FOR SHEAR STUD SPACING, EQUALLY SPACE ALONG BEAM OR SEE PLANS.

A2 TYP SECTION AT COMPOSITE FLOOR BEAMS

S6-1-02 SCALE:NOT TO SCALE

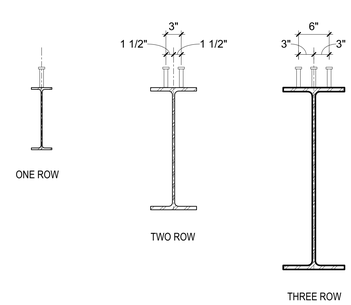

NOTES:
1. SHEAR CONNECTORS IN ONE ROW SHALL BE PLACED DIRECTLY OVER BEAM WEB.
2. PLACE STUDS IN A SINGLE ROW WHERE SPACING REQUIREMENTS PERMIT. STUDS SHALL BE PLACED IN TWO ROWS OR THREE ROWS ONLY WHERE REQUIRED TO PLACE THE TOTAL NUMBER OF REQUIRED STUDS AS SHOWN ON THESE PLANS. SEE TYPICAL DETAIL, SHEAR CONNECTOR PLACEMENT DIAGRAMS.
3. PROVIDE MINIMUM 1" SPACING FROM EDGE OF FLANGE TO CENTERLINE OF STUD.
4. CONTRACTOR SHALL SUBMIT SHOP DRAWINGS SHOWING PLACMENT OF SHEAR CONNECTORS FOR ENGINEER-OF-RECORD'S APPROVAL.

A3 TYP DETAIL SHEAR STUD SPA REQ

S6-1-02 SCALE:NOT TO SCALE

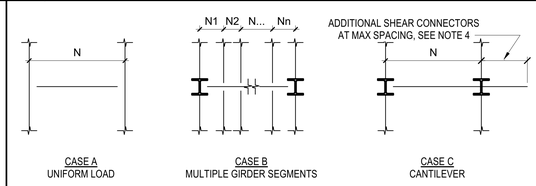

NOTES:
1. N = SPECIFIED NUMBER OF SHEAR CONNECTORS, REFER TO PLANS.
2. UNLESS OTHERWISE NOTED ON PLAN, SHEAR CONNECTORS SHALL BE DISTRIBUTED ALONG THE LENGTH OF THE BEAM AS SHOWN ON DETAILS ABOVE.
3. REFER TO GENERAL NOTES AND PLANS FOR SHEAR CONNECTOR DIAMETER AND LENGTH.
4. MAXIMUM NUMBER OF SHEAR CONNECTORS SHALL BE AS FOLLOWS:
   a. BEAMS PERPINDICULAR TO DECK SPAN: 24 INCHES.
   b. BEAMS PARALLEL TO DECK SPAN: 36 INCHES.
5. WHERE STEEL DECK CORRUGATIONS DO NOT ALLOW FOR AN EVEN SPACING OF SHEAR CONNECTORS WITH ONE STUD IN EACH FLUTE, ADDITIONAL STUDS IN A SECOND ROW (THIRD ROW WHERE REQ'D) SHALL BE PLACED SUCH THAT THE HIGHEST DENSITY OF SHEAR CONNECTORS OCCURS NEAR THE BOTTOM BEAM SUPPORT.
6. WHERE THE SPECIFIED NUMBER OF SHEAR CONNECTORS IS LESS THAN THE BEAM SPAN LENGTH DIVIDED BY THE MAX SPACING (SEE NOTE 4), ADDITIONAL SHEAR CONNECTORS SHALL BE PROVIDED SUCH THAT THE MAX SPACING IS NOT EXCEEDED AT ANY LOCATION IN THE SPAN.
7. CONTRACTOR SHALL SUBMIT SHOP DRAWINGS SHOWING PLACEMENT OF SHEAR CONNECTORS FOR ENGINEER'S APPROVAL.

A4 SHEAR STUD PLACEMENT DIAGRAM

S6-1-02 SCALE:NOT TO SCALE

Building Inspection Division
THESE PLANS HAVE BEEN REVIEWED FOR COMPLIANCE WITH THE CURRENT EDITION OF THE FLORIDA BUILDING CODE
Lakeland
Date: 11/15/19
Permit Number: BLD19-06035

AECOM
BATSON-COOK CONSTRUCTION

PROJECT

PUBLIX HEADQUARTERS BUILDING ADDITION AND PARKING LOT EXPANSION

3300 PUBLIX CORPORATE PARKWAY
LAKELAND, FL 33811

CLIENT

Publix

3300 PUBLIX CORPORATE PARKWAY
LAKELAND, FL 33811

www.publix.com

CONSULTANT

AECOM

AECOM TECHNICAL SERVICES, INC.
800 Douglas Entrance
North Tower, 2nd Floor
Coral Gables, FL 33134
305.444.4691 tel 305.447.3580 fax
www.aecom.com

ARCHITECTURE
LICENSE NO. AA26000687

ENGINEERING
CA LIC. NO. 8115

http://www.aecom.com

REGISTRATION

VINCENT RAJ VACCARELLO-WADEHRA, PROFESSIONAL ENGINEER, STATE OF FLORIDA, LICENSE NO. 81224

THIS ITEM HAS BEEN DIGITALLY SIGNED AND SEALED BY VINCENT RAJ VACCARELLO-WADEHRA, PROFESSIONAL ENGINEER, STATE OF FLORIDA, LICENSE NO. 81224 ON THE DATE INDICATED HERE. PRINTED COPIES OF THIS DOCUMENT ARE NOT CONSIDERED SIGNED AND SEALED AND THE SIGNATURE MUST BE VERIFIED ON ANY ELECTRONIC COPIES.

Vincent R Vaccarello -Wadehra
Digitally signed by Vincent R Vaccarello-Wadehra
Date: 2019.08.22 18:03:04 -04'00'

ISSUE/REVISION

I/R	DATE	DESCRIPTION
0	AUGUST 23, 2019	CONSTRUCTION DOCUMENTS
	AUGUST 16, 2019	90% CONSTRUCTION DOCUMENTS
	JUNE 27, 2019	STEEL DESIGN PACKAGE

PROJECT NUMBER

60601397

SHEET TITLE

STRUCTURAL FRAMING DETAILS

SHEET NUMBER

S6-1-02

This drawing has been prepared for the use of AECOM's client and may not be used, reproduced or relied upon by third parties, except as agreed by AECOM and its client, as required by law or for use by governmental reviewing agencies. AECOM accepts no responsibility, and denies any liability whatsoever to any party that modifies this drawing without AECOM's express written consent. Do not scale this document. All measurements must be obtained from the stated dimensions.

NOTICE: THE OFFICIAL RECORD OF THIS SHEET IS THE ELECTRONIC FILE SIGNED AND SEALED UNDER RULE 61G15-23.004, F.A.C.

©2016 AECOM Corporation

Project Management Initials: Designer: Designer Checker: Checker Approved: Approver/RCH E1 30"x42"
Last Plotted: 8/22/2019 5:39:48 PM
Filename: BIM 360:/60601397-Publix HQ/60601397_Publix HQ_STRUCT_R2019.rvt

Printed on ___% Post-Consumer Recycled Content Paper